Electrolux PROFESSIONAL

Warewashing
Medium hot air blower zone without door for green&clean multi-rinse Rack Type Dishwasher

ITEM # _____

MODEL # _____

NAME # _____

SIS # _____

AIA # _____

534056 (NMHABE) Medium hot air blower zone without door for green&clean Multi Rinse Rack Type Dishwasher

Short Form Specification

Item No. _____

Unit to be Electrolux medium hot air blower without door suitable to be installed with Electrolux green&clean multi-rinse rack type dishwasher. Electrical characteristics to be __ 400V three phase operation. The addition of the external air reduces the internal humidity thus increasing the drying efficiency without high energy consumption. Construction in AISI 304 stainless steel. Suitable for any feeding direction of the dishwasher thanks to easy reversibility on-site. Full pre-arrangement to be connected with Electrolux green&clean multi-rinse rack type dishwasher without any modification.

APPROVAL: _____

Main Features

- Unit to be placed between multi-rinse rack type dishwasher and handling system.
- All main components made in heavy duty anti-corrosive 304 type stainless steel: internal chamber, external, front and side panels and rack transportation system.
- Drying zone removes most of water from the crockery through a high powered fan that extracts dry air from outside mixing it with the internal air, thus providing dry plates at a temperature cool enough to handle safely.
- Electronically controlled to optimize drying results.
- IP25 protection against water jets, solid objects and small animals (larger than 6 mm).
- The feeding direction can be either left to right or right to left as it's reversible on site.

Construction

- The chamber is pressed with fully rounded corners without internal pipes and therefore no hidden dirt traps.
- The unit is built on modularity concept to easily connect with multi-rinse rack type dishwasher without any modification including power connection.

Optional Accessories

- Plain undershelf with hole for drain for Hot Air Blower, 560 mm — PNC 863228 ❑
- Grid undershelf for Hot Air Blower, 555 mm — PNC 863229 ❑
- Pair of legs for long conveyors connected directly to the Rack Type Dishwasher with hot air blower — PNC 865477 ❑

Electrolux PROFESSIONAL

Warewashing
Medium hot air blower zone without door for green&clean multi-rinse Rack Type Dishwasher

Front

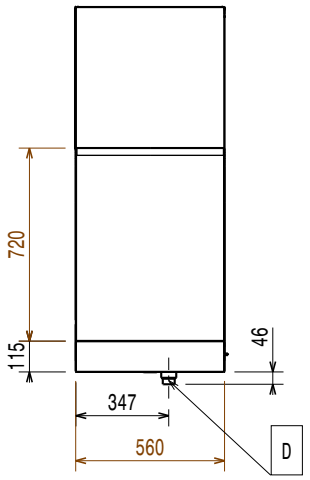

Side

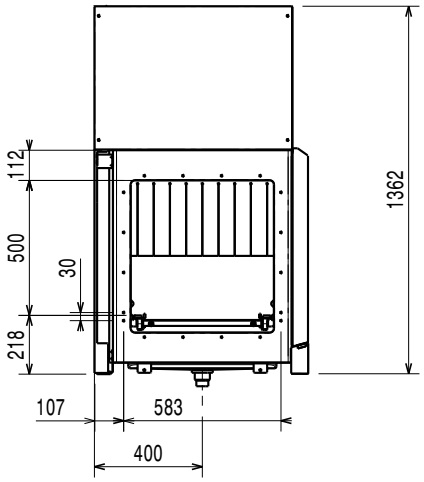

D = Drain
EI = Electrical inlet (power)
EO = Electrical Outlet
EQ = Equipotential screw
ES = Electrical signal IN/OUT
U = USB port

Top

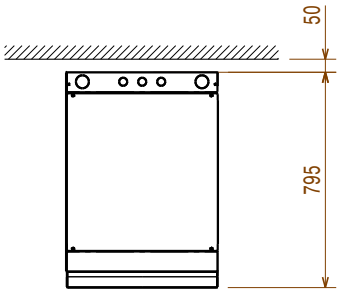

Electric

Supply voltage:	
534056 (NMHABE)	380-415 V/3N ph/50 Hz
Default Installed Power:	4.4 kW
Dryer heating elements:	4.13 kW
Drying fan power:	0.23 kW

Key Information:

Dryer air flow:	540 m³/h
Dryer air temperature:	70 °C
External dimensions, Width:	560 mm
External dimensions, Depth:	795 mm
External dimensions, Height:	1362 mm
Charging hole size (width):	530 mm
Charging hole size (height):	490 mm
Net weight:	75 kg
Shipping weight:	75 kg
Shipping height:	1560 mm
Shipping width:	900 mm
Shipping depth:	720 mm
Shipping volume:	1.01 m³

Reference norm used to measure the noise: IEC60335-2-58 annex AA.

Sustainability

Noise level:	<62 dBA

The company reserves the right to make modifications to the products without prior notice. All information correct at time of printing.

2024.10.06